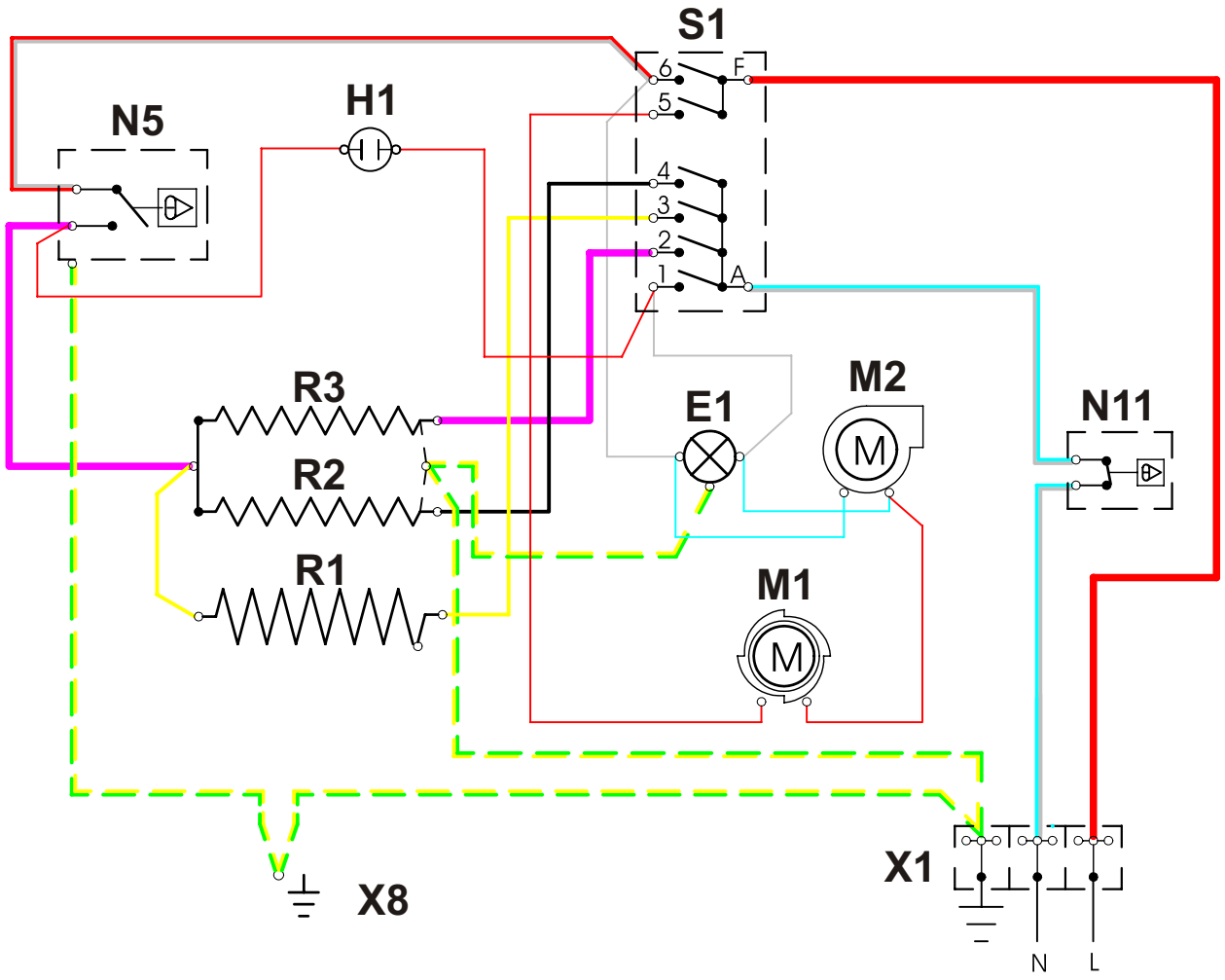

Schalter 8 P. Ref. 780625 "Gottak"												
		1	2	3	4	5	6	7	8			
6	F		●	●	●	●	●	●	●			Leiter L
5				●			●					M. Turbo
4			●	●		●	●					Oberhitze
3			●	●				●	●			Unterhitze
2					●	●	●		●			Grill
1	A		●	●	●	●	●	●	●			Nullleiter

Schalter 8 P. Ref. 6CH/1000 "Dreefs"												
		1	2	3	4	5	6	7	8			
6	6A		●	●	●	●	●	●	●			Leiter L
5	5A			●			●					M. Turbo
4	4A		●	●		●	●					Oberhitze
3	3A		●	●				●	●			Unterhitze
2	2A				●	●	●		●			Grill
1	1A		●	●	●	●	●	●	●			Nullleiter

Symbol	Bezeichnung
	Teilkabel 1,5 mm²
	Teilkabel 1,5 mm² (Erde)
	Teilkabel 1 mm²
	Silikonkabel 1 mm²
	Teilkabel 0,5 mm²
	Teilkabel 0,5 mm² T250