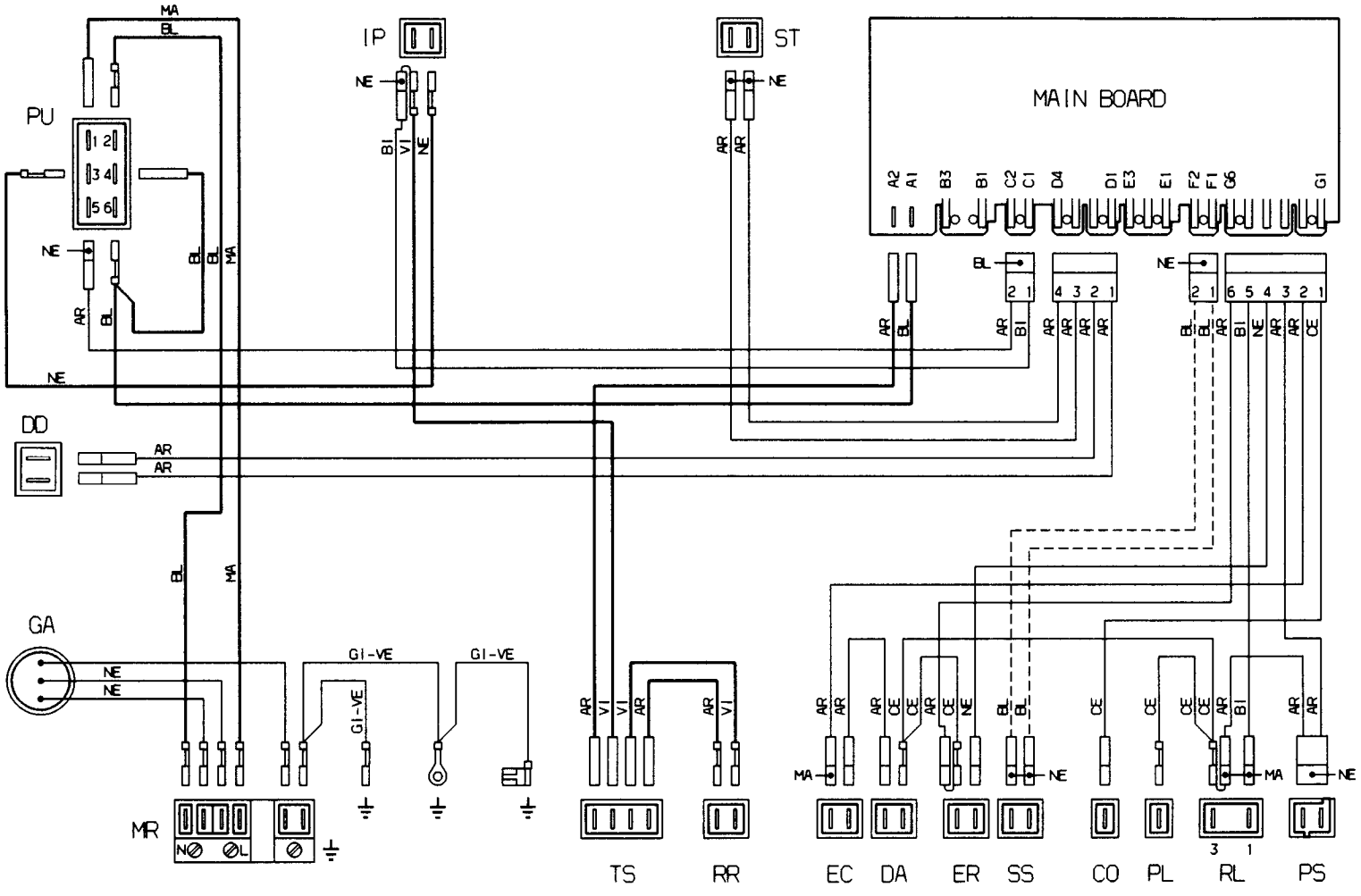

152 295703a

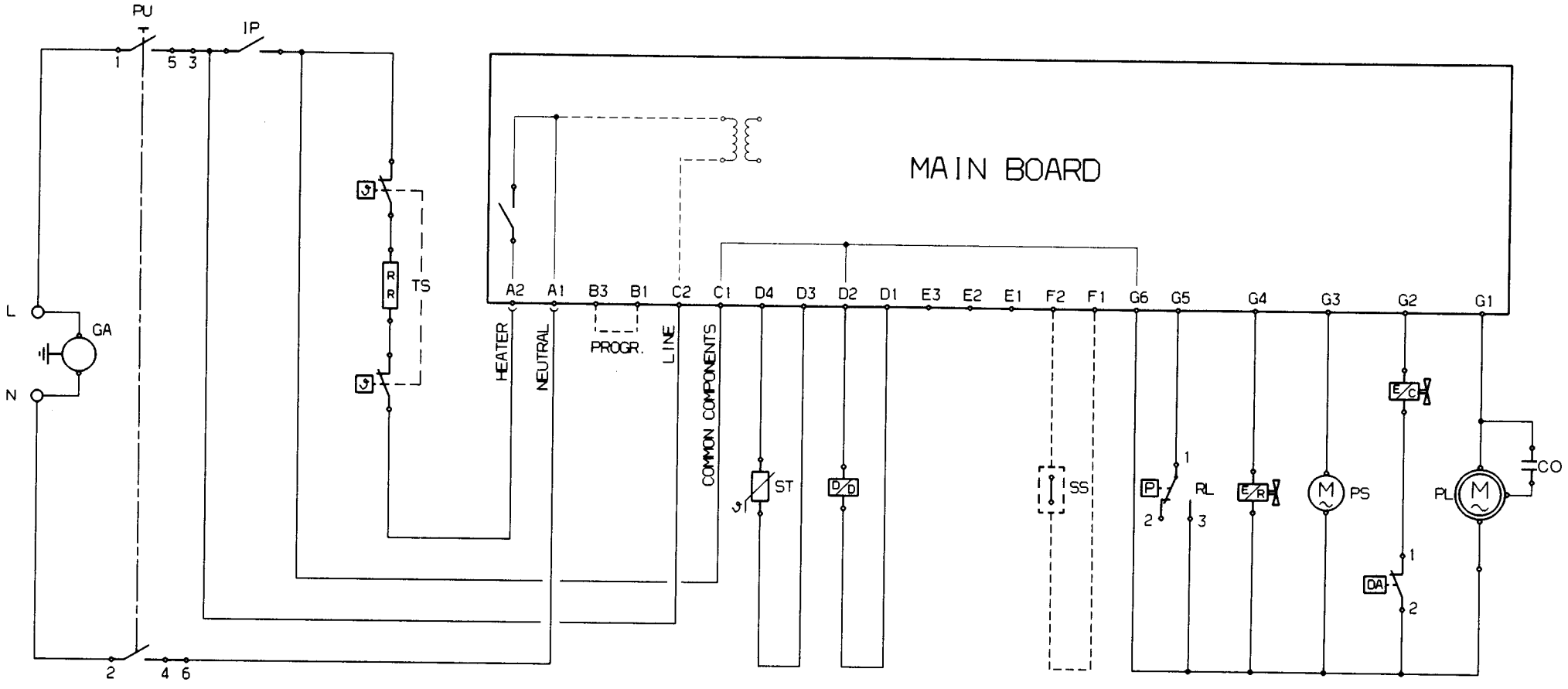
PU
IP
1
5 3
2
4 6
L
N
GA
TS
R
R
MAIN BOARD
A2
A1
B3
B1
C2
C1
D4
D3
D2
D1
E3
E2
E1
F2
F1
G6
G5
G4
G3
G2
G1
HEATER
NEUTRAL
PROGR.
LINE
COMMON COMPONENTS
ST
SS
P
RL
E R
M
PS
E C
DA
PL
CO

152 295703b