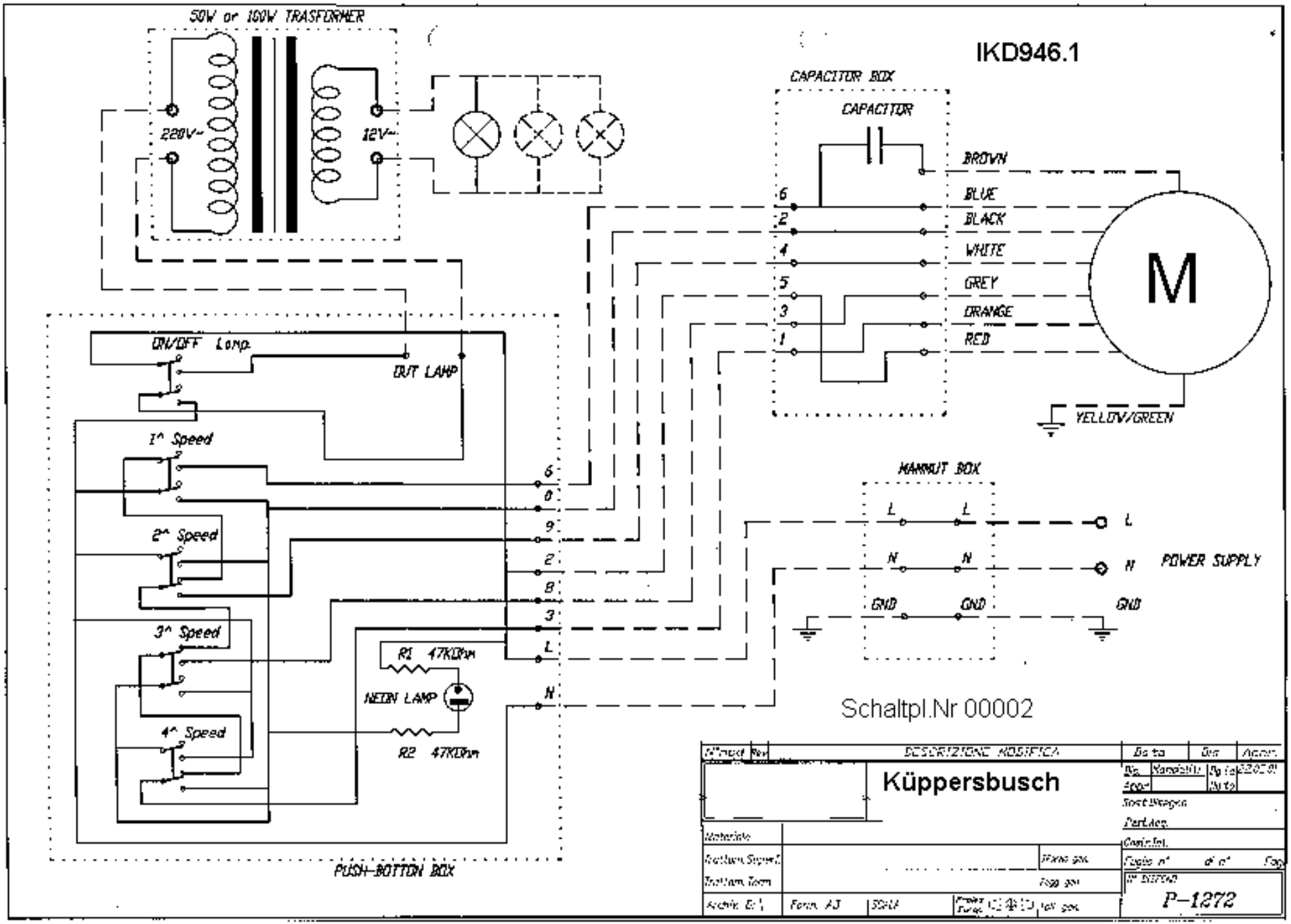
IKD946.1
50W or 100W TRASFORMER
220V~
12V~
CAPACITOR BOX
CAPACITOR
BROWN
BLUE
BLACK
WHITE
GREY
ORANGE
RED
6
2
4
5
3
1
M
YELLOW/GREEN
ON/OFF Lamp
OUT LAMP
1^ Speed
2^ Speed
3^ Speed
4^ Speed
6
0
9
2
8
3
L
N
R1 47KOhm
NEON LAMP
R2 47KOhm
PUSH-BOTTON BOX
MAINOUT BOX
L
N
GND
POWER SUPPLY
Schaltpl.Nr 00002
Küppersbusch
P-1272