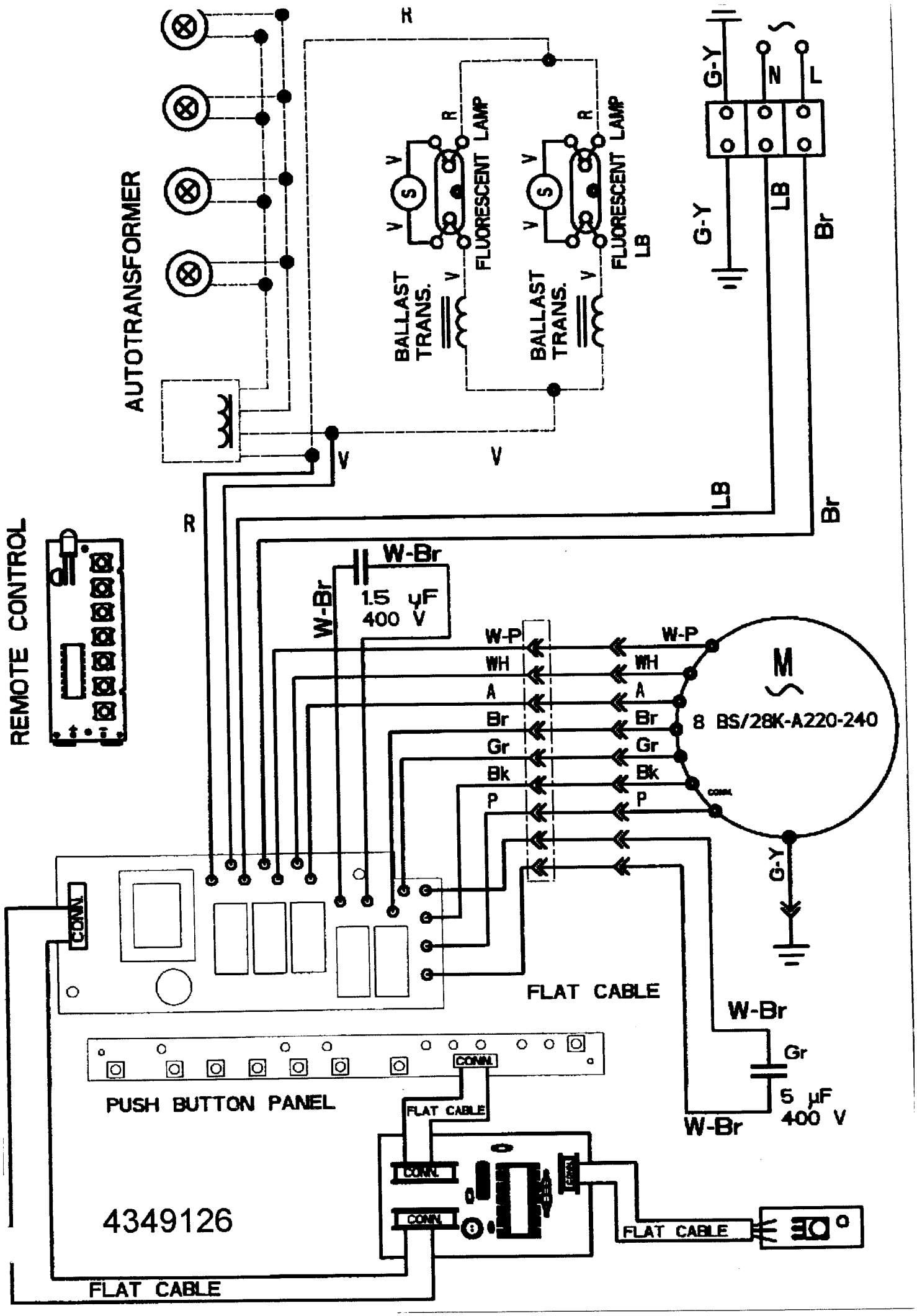
AUTOTRANSFORMER
R
V
V
R
LB
Br
G-Y
N
L
G-Y
LB
Br
BALLAST TRANS.
FLUORESCENT LAMP
BALLAST TRANS.
FLUORESCENT LAMP
LB
REMOTE CONTROL
W-Br
1.5 µF
400 V
W-Br
W-P
WH
A
Br
Gr
Bk
P
W-P
WH
A
Br
Gr
Bk
P
M
8 BS/28K-A220-240
COMM.
G-Y
CONN.
FLAT CABLE
W-Br
Gr
5 µF
400 V
W-Br
PUSH BUTTON PANEL
CONN.
FLAT CABLE
CONN.
CONN.
FLAT CABLE
4349126
FLAT CABLE