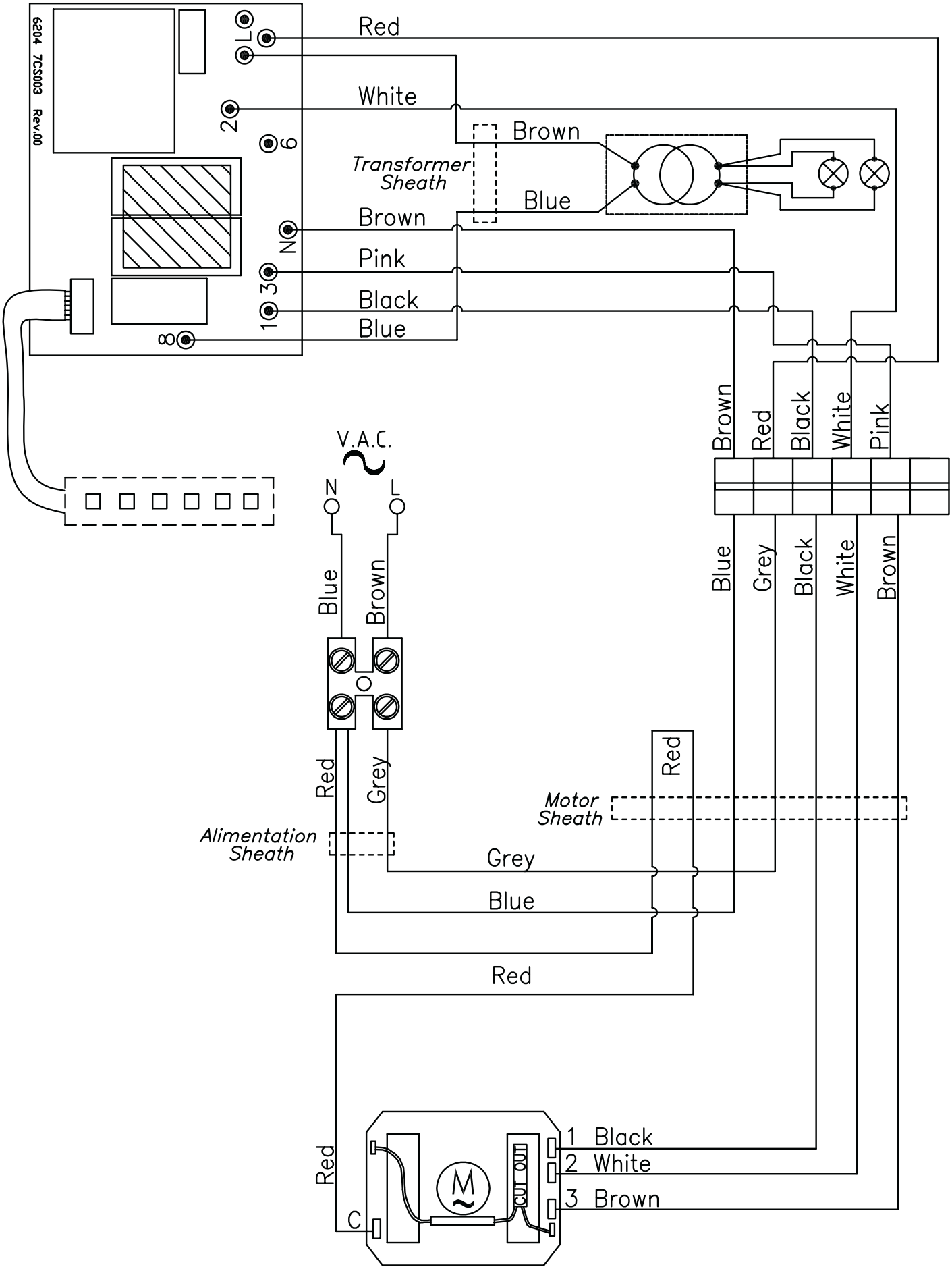
6204 7CS003 Rev.00
L
2
6
N
3
1
8
Red
White
Brown
Transformer Sheath
Blue
Brown
Pink
Black
Blue
Brown
Red
Black
White
Pink
V.A.C.
N
L
Blue
Brown
Blue
Grey
Black
White
Brown
Red
Grey
Red
Motor Sheath
Alimentation Sheath
Grey
Blue
Red
Red
C
M
CUT OUT
1 Black
2 White
3 Brown

6SE_344