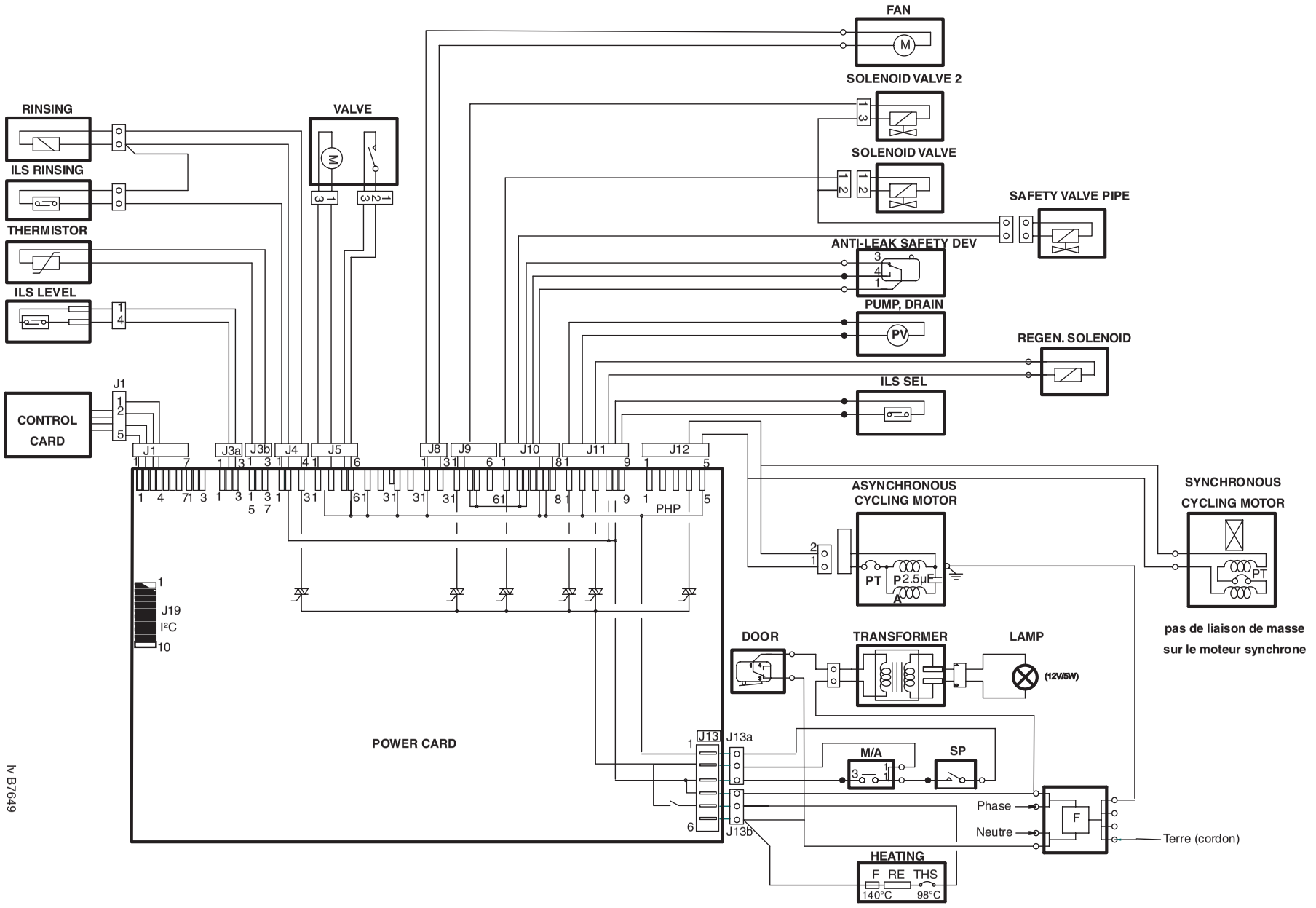
FAN
SOLENOID VALVE 2
SOLENOID VALVE
SAFETY VALVE PIPE
ANTI-LEAK SAFETY DEV
PUMP, DRAIN
REGEN. SOLENOID
ILS SEL
RINSING
ILS RINSING
THERMISTOR
ILS LEVEL
VALVE
CONTROL CARD
J1
J3a
J3b
J4
J5
J8
J9
J10
J11
J12
PHP
J19
I²C
POWER CARD
J13
J13a
J13b
ASYNCHRONOUS CYCLING MOTOR
PT
P
2.5µF
A
SYNCHRONOUS CYCLING MOTOR
pas de liaison de masse sur le moteur synchrone
DOOR
TRANSFORMER
LAMP
(12V/5W)
M/A
SP
Phase
Neutre
F
Terre (cordon)
HEATING
F
RE
THS
140°C
98°C

lv B7649